BODY, DOORS - Z26NEY99A4/B4/A6/B6 (C0703975)

2026 RZR - RZR XP S 1000 ULTIMATE (R01) - Z26NEY99A4/B4/A6/B6

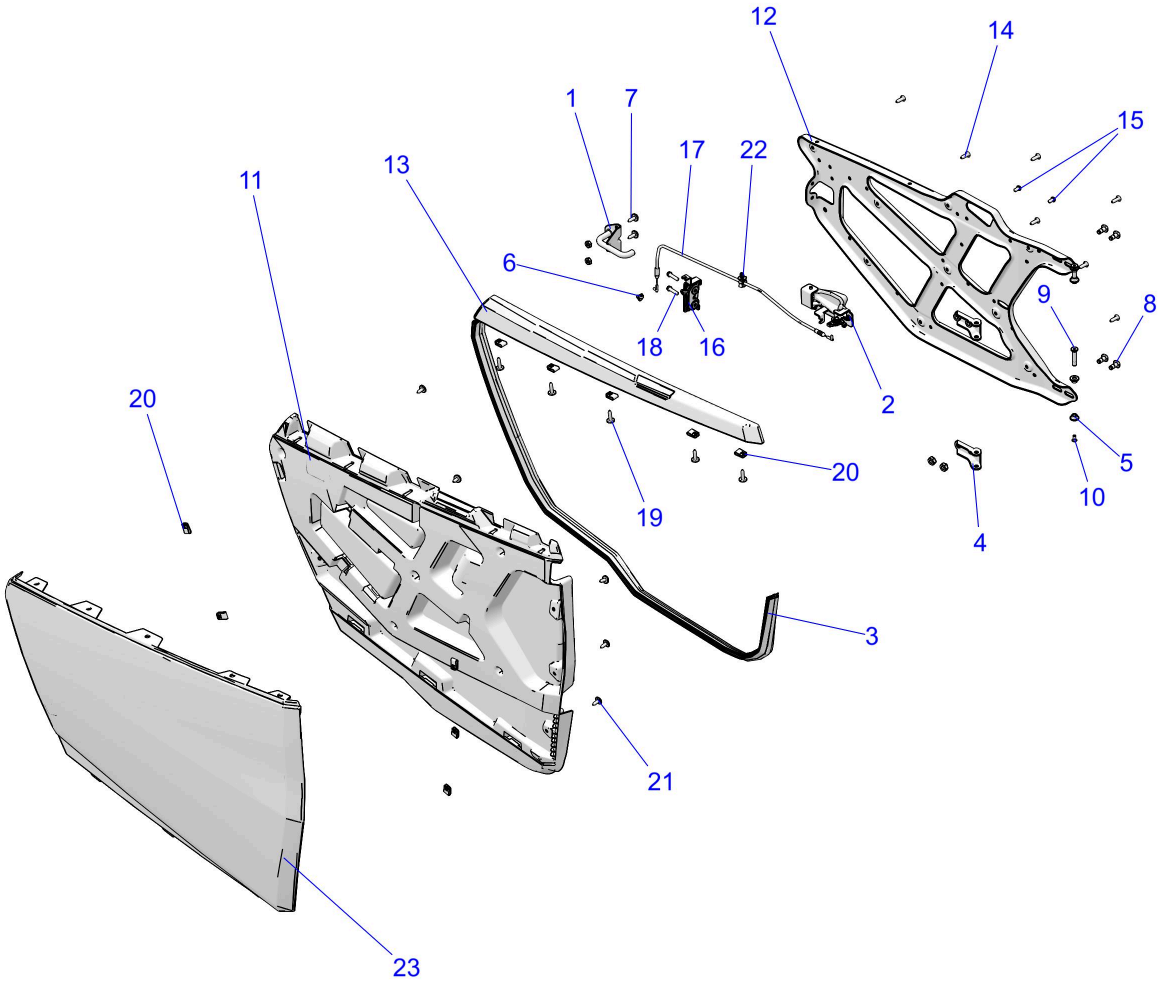

© 2021 Polaris Industries Inc. C0703975

Reference #	*Part#*	*Description*	*Quantity*
1	1026942-329	WELD-STRIKER,FRT,ECOAT	2
2	2639143	ASM-ACTUATOR DOOR,LH	1
2	2639144	ASM-ACTUATOR DOOR,RH	1
3	5522386-1329	SEAL-WTHRSTRP,1329MM	2
4	5270635	BRACKET, DOOR, HINGE	4
5	5450592	BUSHING, DOOR, PIVOT	8
6	5454637	CLIP-DOOR LATCH	2
7	7519112	SCREW-TXTH-M6X1.0X20 T40 ZPB	4
8	7519997	SCR-TXTH-M8X1.25X20 8.8 ZB3 P3	8
9	7527956	SCR-TXWH-M5X0.8X40 10.9 ZTB SP	4

10	7517255	SCREW-FLHD-M5X0.8X12 10.9 P&O	4
11	5459361-070	PANEL-DOOR,INNER,LH,BLK	1
11	5459362-070	PANEL-DOOR,INNER,RH,BLK	1
12	5272538-458	STAMPING-DOOR FRAME,LH,BLK	1
12	5272539-458	STAMPING-DOOR FRAME,RH,BLK	1
13	5459359-070	DOOR CAP,LH,BLK	1
13	5459360-070	DOOR CAP,RH,BLK	1
14	7519045	SCR-TX TRUSS-#14X3/4, HI/LO ZBK	AR
15	7519063	SCREW-TXBH-M6X1.0X12 8.8 ZPB D20	4
16	7082759	ASM-LATCH,RTRY,2 STG,LH	1
16	7082760	ASM-LATCH,RTRY,2 STG,RH	1
17	7082973	CABLE-DOOR,FRONT	2
18	7519297	SCREW-HXFLG,M6X1.0X25,10.9	4
19	7519650	SCR-TXTH-M6X1.0X25 ZFB	10
20	7547674	NUT-M6-1.0, U-TYPE (2.5-3.8)	AR
21	7518936	SCR-M6X1X16 TR/TX-M	10
22	7662310	CLIP-NYLON, C, FIR-TREE	2
23	5459367-804	DOOR SKIN,LH,MIC,STLTH GR [A4/B4]	1
23	5459367-902	DOOR SKIN,LH,MIC,SD DUNE [A6/B6]	1
23	5459368-804	DOOR SKIN,RH,MIC,STLTH GR [A4/B4]	1
23	5459368-902	DOOR SKIN,RH,MIC,SD DUNE [A6/B6]	1

Copyright 1996-2026 Polaris Industries U.S.A All rights reserved.